OPERATING INSTRUCTIONS

GENERAL PURPOSE SURVEY METER

MODEL 471

VICTOREEN

SG A Subsidiary of Sheller-Globe

GENERAL PURPOSE SURVEY METER

Model 471

Serial #_____

VICTOREEN, INC.
Cleveland, Ohio 44104
A Sheller-Globe Corporation Subsidiary

USER CAUTION

If this instrument is intended for the detection and measurement of ionizing radiation, it should be used only by persons who have been trained in the proper interpretation of its readings and the appropriate safety procedures to be followed in the presence of radiation. All instructions and warnings contained in this manual or on the instrument must be read before use and must be strictly followed. Failure to follow these instructions and warnings may result in inaccurate readings and/or user hazard. Battery and other operational checks must be performed prior to each use to assure that the instrument is functioning properly.

READ YOUR INSTRUCTION MANUAL

TABLE OF CONTENTS

Topic	Title	Page
1	INTRODUCTION.	1
2	SPECIFICATIONS.	4
3	OPERATION	8
4	CALIBRATION	13
5	MAINTENANCE	19
6	TROUBLESHOOTING	22
7	REPLACEABLE PARTS	27

Figure	Title	Page
1	Operational Amplifier, Current Amplifier Configuration.	3
2	Collection Efficiency Graph	7
3	Model 471	10
4	Energy Response Curve	14
5	Relative Angular Response	17
6	Source Distance	18
7	Exploded View	20
8	Circuit Board Assembly	24
9	Schematic Circuit Diagram	25-26

Table	Title	Pag
I	Air Density Correction	16

1 INTRODUCTION - The Survey Meter is an ion chamber meter used to detect alpha, beta, gamma and X-ray radiation. It measures total exposure from 0 to 300 mR, or exposure rate from 1 mR/h to full scale for gamma and X-ray energies from 6 keV to 2 MeV.

The Model 471 is ideal in such exposure measurement applications as background studies, general health physics surveys, radiochemical lab surveys, nuclear power plant surveys, X-ray and radiotherapy facility surveys, fuel processing plant surveys, research lab surveys and in certain NDT applications.

1.1 Theory - When the ion chamber is exposed to radiation, the internal air volume becomes ionized. A DC potential applied between the outer shell and center electrode separates the newly formed ion pairs before they can recombine and collects them. The ions, upon reaching the electrodes, are restored to neutral gas atoms through the process of taking on (or giving up) electrons. This causes a direct current flow in the external circuit. The ion chamber can be considered a constant current generator whose output current is directly proportional to the rate of internal air ionization or exposure rate. These currents are extremely small and special electrometer circuitry is required to measure them.

An operational, current-amplifier configuration is employed in this instrument (Figure 1). The large amount of negative feedback causes the output voltage to be a function of input current and feedback element value, rather than amplifier gain or other variables. A MOS FET electrometer is used for the operational amplifier. The feedback element is either a high megohm resistor or a capacitor.

Precision film resistors, selected by the Range Switch, determine the feedback ratio and hence, the full scale sensitivity of the instrument. A variable resistor is employed to accurately calibrate the meter deflection to a known exposure rate radiation field.

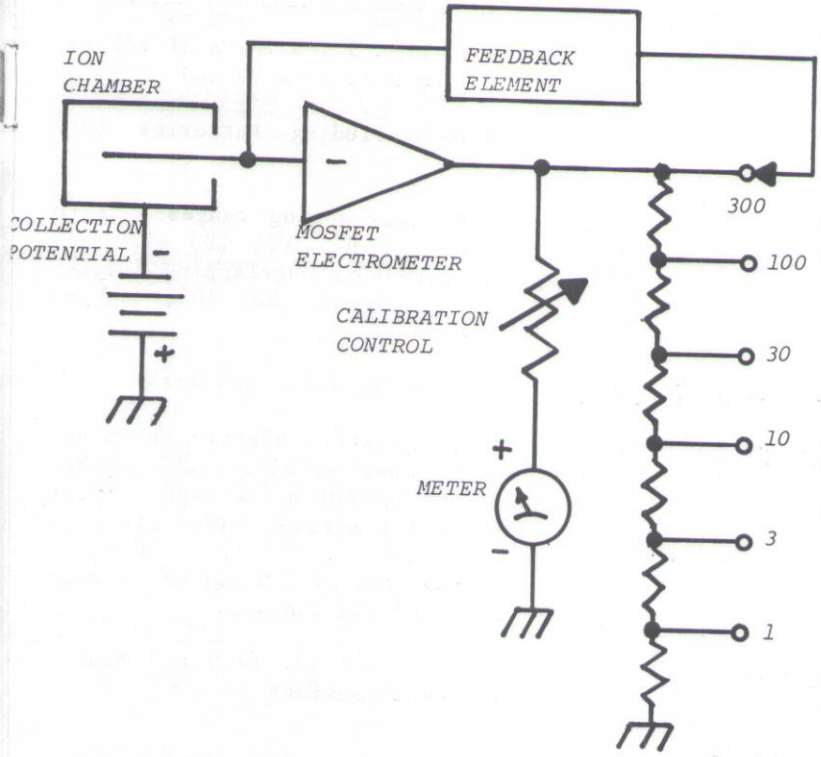

Figure 1. Operational Amplifier; Current-Amplifier Configuration

2 SPECIFICATIONS

Feature	Specification
Dimensions (H x W x L)	7 5/8 in. x 5 1/8 in. x 11 1/2 in. (19.4 cm x 13 cm x 29 cm)
Weight	4.9 lbs including batteries (2.2 kg)
Range	Twelve overlapping ranges: 0 to 1, 3, 10, 30, 100, 300 mR/h and R/h (rate) Six overlapping ranges: 0 to 1, 3, 10, 30, 100, 300 mR (integrate)
Radiation Detected	Alpha, beta, gamma and X-ray
Detector	Unsealed, air ionization chamber. The chamber consists of a bakelite wall, 200 mg/cm^2 and a mylar window 1.1 mg/cm^2. The volume of the chamber is 485 cc. An equilibrium cap of 300 mg/cm^2 is provided for the chamber.
Display	Meter, 3 1/8 in. (7.9 cm) scale, taut baud movement
Controls:	
• External	Function Switch: R/h, mR/h, integ. mR Range Switch: Off, batt, 300, 100, 30, 10, 3, 1 Set Zero Knob

2 SPECIFICATIONS (Cont'd)

Feature	Specification
• Internal	Calibration Adjust, Chamber Bias Test Switch, Coarse Zero Adjust
Energy Response	± 10%, 6 keV to 300 keV along chamber axis with equilibrium cap off. ± 10%, 25 keV to 2 MeV with equilibrium cap on, 2 pi solid angle.
Response Time	8 seconds on 3 mR/h range 3 seconds on 10 mR/h range 2 seconds on 30 mR/h range 1.5 seconds on 100 mR/h and 300 mR/h range
Switching Transients	Less than 8 seconds when moving Function Switch or Set Zero knob. No transients on other controls.
Batteries	Two 1.5 V D-cells and four 22.5 V AA Eveready #505 batteries
Battery Life:	
• D-cells, mR/h range	150 hours at 24 hours/day 210 hours at 8 hours/day
• D-cells, R/h range	85 hours at 24 hours/day 120 hours at 8 hours/day
• 22.5 V Battery	Approximately one year
Zero Adjust	Can be properly adjusted in a radiation field.

BLANK

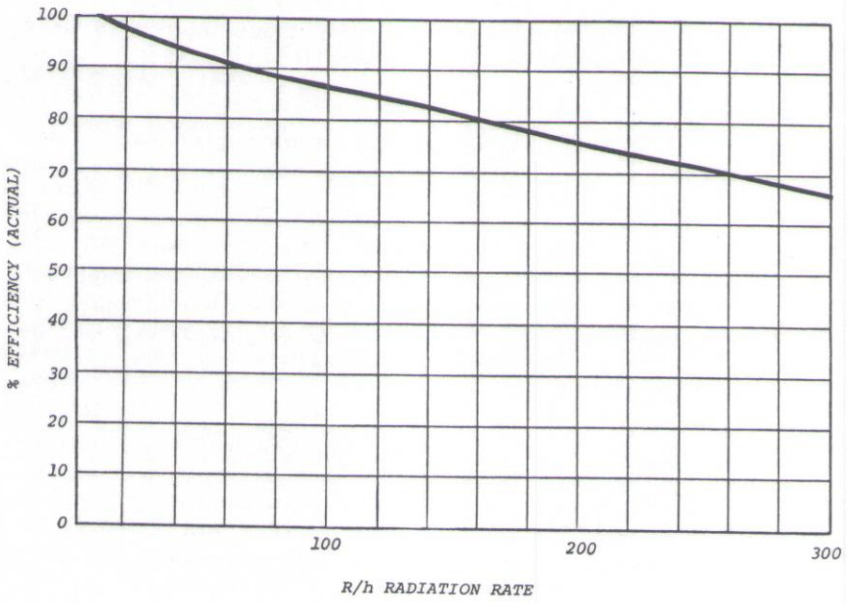

Figure 2. Collection Efficiency Graph

3 OPERATION

3.1 Operating Controls

3.1.1 Range Switch - The Range Switch has eight positions: Off, batt, or a sensitivity of 300, 100, 30, 10, 3 or 1. The batt position on the Range Switch is used to check the condition of the D-cell batteries.

3.1.2 Function Switch - The Function Switch can be set so that the 471 measures R/h, mR/h or integ. mR (integrate mR).

3.1.3 Set Zero - Since the instrument is susceptible to zero drift after initial turn on or when subject to environmental extremes, zeroing is provided and can be accomplished in any radiation field.

3.1.4 Calibration Potentiometer, Coarse Zero Potentiometer and Chamber Bias Voltage Test Switch - A calibration potentiometer, a coarse zero potentiometer and a collecting voltage battery test switch are located on the back panel of the instrument directly under the rear end of the handle. See Figure 3. To adjust the potentiometers or check the chamber bias voltage, simply remove the screw from the back of the case and use a small screwdriver to make the desired adjustments.

The calibration potentiometer is factory adjusted and should be readjusted only with a calibrated radiation source. Refer to the calibration procedure (Topic 4.5) for detailed instructions.

The coarse zero set potentiometer is used when the Set Zero knob on the top of the instrument is out of range. It may be set by first placing the Range Switch in the middle of the adjustment range and then adjusting the coarse zero potentiometer until the panel meter reads zero. Press the Set Zero knob while performing this procedure.

The chamber bias voltage test switch is used to check the condition of the 22.5 V batteries. Since the batteries will last for their shelf life, this test only needs to be performed occasionally. This can be accomplished by inserting a small screwdriver into the chamber bias voltage test opening on the back of the instrument (remove the screw) and pressing the button. When the switch is actuated, the meter will read about 95% of full scale. Note the reading, for future reference, to establish the battery condition. The batteries should be replaced when they have dropped about 5% below the initial reading. The reason for noting the reading and replacing the batteries if there is a 5% drop is that such a reading is a reasonable indication of battery shelf life. This check must be performed with the Range Switch in the off position.

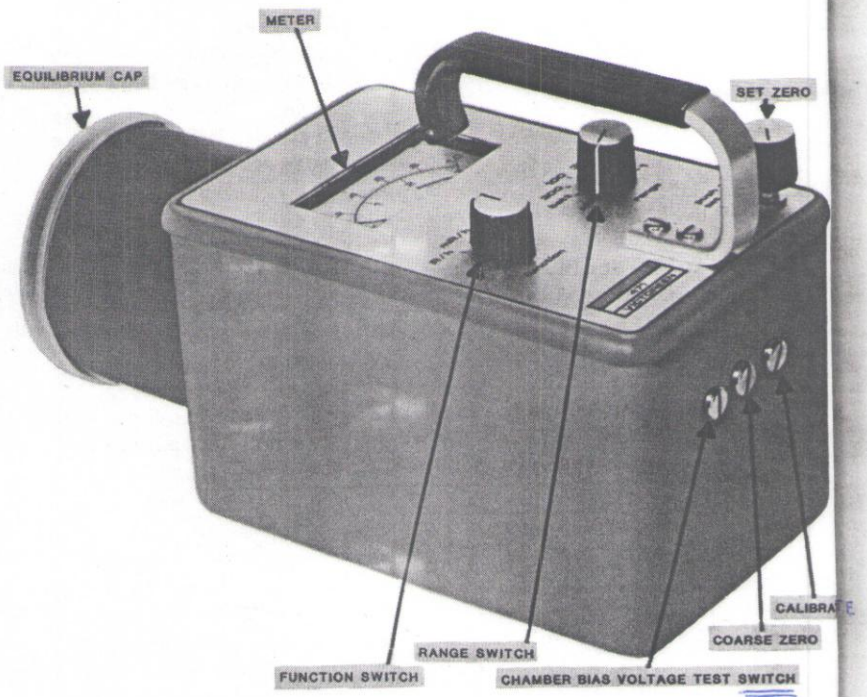

Figure 3. Model 471

3.2 Battery Installation - The 471 is shipped with the batteries in a separate package. Two D-cell (1.5 V) and four AA (22.5 V) batteries are required. Before installation, be sure that the Range Switch is in the Off position. 22.5 volt Batt's Eveready #505 / NEDA #221

ALL 2 D cell Batteries New Dec 2010

To install the batteries, remove the four screws from the case bottom, then gently pull the top upward. The battery holders are located on the case top. Install the batteries observing the proper polarity. When replacing the case top, ensure that the interconnecting cable is replaced in the same area that it came out of so that interference does not occur.

The 22.5 V batteries provide chamber collection voltage and do not experience significant current drain. Battery life is equal to shelf life which should be in excess of one year.

ALL 4 NEW AUGUST 2010

The purpose of the collecting voltage is to supply the electrostatic field which sweeps the ions created in the chamber to the walls and center electrode, where they constitute the current which is measured by the electronics. This should be done with as little recombination of ions as possible.

3.3 Turn On Sequence - Turn the Range Switch from off to batt and verify that the meter reads in the BATT OK green region. Then turn the Range Switch to 300 and the Function Switch to R/h. Push the Set Zero knob and turn it until the meter reads zero. Release the knob and turn the Function Switch to mR/h.

After one minute, turn the Range Switch to 1 and Set Zero as described above. The instrument should now read background radiation and is ready for a calibration test.

N O T E

The Set Zero procedure should also be performed before using the integrate mR mode of operation.

During the first five minutes of operation, the zero may drift due to dielectric absorption in the MOS FET electrometer. Rezero it after three or four minutes.

Before beginning operation, the 471 must pass a calibration test. Place a small radiation source near the instrument so that it reads about one mR/h. Turn the Range Switch to the 10 mR/h and the 30 mR/h range. The meter reading should decrease on each range change to indicate about one mR/h. If the 471 fails the turn on sequence or the calibration test, refer to the troubleshooting section of this manual.

After the warm-up and calibration test, select the desired range and function, then begin operation.

C A U T I O N

If the ion chamber is broken, or contaminated with radioactive material, it must be replaced. Refer to Topic 5 for replacement instructions.

4 **CALIBRATION** - The 471 is calibrated at the factory. When field calibration is necessary, four correction factors must be taken into consideration. They are Energy Dependence, Temperature and Pressure, Directional Dependence, and Source Distance.

4.1 Energy Dependence - Any ion chamber has a certain energy dependence. That is, holding the exposure rate constant, the chamber responds differently to different energy photons. The Model 471 has been calibrated at an effective energy of 662 keV from ^{137}Cs. The response is fairly energy dependent in the low energy region. For accurate usage at middle and high energy regions, the Energy Response Correction Curve must be used (Figure 4). Divide the meter reading by the value on the curve.

4.2 Temperature and Pressure - Air, at standard temperature and pressure, is the ionized medium in the exposure rate definition. The density of the air directly determines the ionization rate with all other factors held constant. The density is, in turn, a function of barometric pressure and Kelvin temperature. Since the ion chamber is not sealed, a small correction must be made for temperature and barometric pressures different from those used during calibration.

Standard temperature, 0°C, is rarely encountered in practice. The Model 471 is calibrated and corrected to 22°C and 760 mmHg. For different temperatures and pressures, correction factors will be found on Table I.

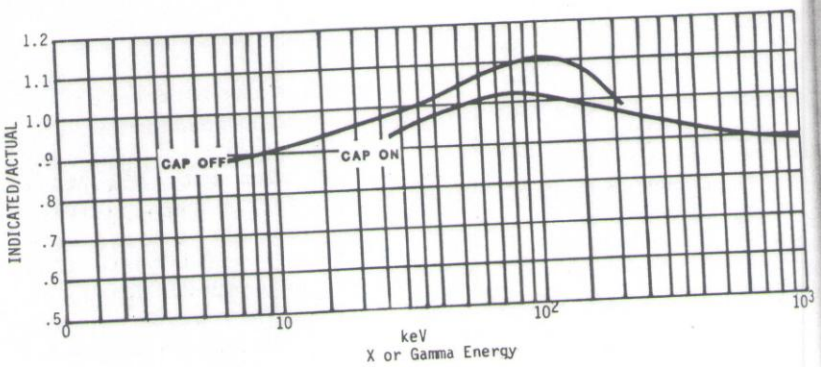

Figure 4. Energy Response Curve

4.3 Directional Dependence - The shape, wall material, center electrode design, and position of the ion chamber in the Model 471 results in an instrument response relatively independent of the direction of the incident radiation. Figure 5 gives the relative angular response of the Model 471 with the equilibrium cap on at 1.3 MeV (^{60}Co), 120 keV, and 40 keV effective.

4.4 Source Distance - If a point source or a collimated beam is used, the 471 chamber must be far enough from the source so that the entire ion chamber is uniformly exposed. In practice this means any point source should be at least one meter from the ion chamber. The center of volume of the chamber is 4.3 cm from the end (Figure 6).

4.5 Calibration Procedure

1. Set the 471 to the 300 mR/h range and zero it.

2. Place the ion chamber in a 100 mR/h field and adjust the calibration potentiometer for the correct reading. Use the equilibrium cap if the effective energy of the source is over 100 keV. Be sure to correct for temperature, pressure, and energy response.

TABLE I: AIR DENSITY CORRECTION TABLE

INCHES	Mm.	F. 60.8 C. 16	64.4 18	68.0 20	71.6 22	75.2 24	78.8 26	82.4 28	86.0 30	89.6 32	93.2 34	96.8 36	100.4 38	104.0 40
19.68	500	1.489	1.499	1.509	1.520	1.530	1.541	1.551	1.561	1.571	1.582	1.592	1.602	1.613
20.08	510	1.460	1.469	1.479	1.490	1.499	1.510	1.520	1.530	1.540	1.551	1.561	1.571	1.581
20.47	520	1.431	1.441	1.451	1.461	1.471	1.481	1.491	1.500	1.510	1.520	1.530	1.540	1.550
20.87	530	1.405	1.414	1.424	1.434	1.444	1.453	1.463	1.473	1.482	1.492	1.502	1.512	1.521
21.26	540	1.378	1.388	1.397	1.407	1.416	1.426	1.435	1.445	1.454	1.464	1.474	1.483	1.493
21.65	550	1.354	1.363	1.373	1.382	1.391	1.401	1.410	1.419	1.429	1.438	1.448	1.457	1.466
22.05	560	1.329	1.338	1.348	1.357	1.366	1.375	1.384	1.394	1.403	1.412	1.421	1.431	1.439
22.44	570	1.306	1.315	1.324	1.333	1.342	1.351	1.360	1.369	1.378	1.387	1.396	1.405	1.414
22.83	580	1.283	1.292	1.301	1.310	1.319	1.328	1.337	1.345	1.354	1.363	1.372	1.381	1.389
23.23	590	1.262	1.270	1.279	1.288	1.297	1.305	1.314	1.323	1.331	1.340	1.349	1.358	1.366
23.62	600	1.241	1.249	1.258	1.267	1.275	1.284	1.293	1.301	1.309	1.318	1.327	1.336	1.344
24.02	610	1.220	1.229	1.237	1.246	1.254	1.263	1.271	1.279	1.288	1.297	1.305	1.314	1.322
24.41	620	1.200	1.208	1.217	1.225	1.233	1.242	1.249	1.258	1.266	1.275	1.283	1.292	1.299
24.80	630	1.181	1.189	1.198	1.206	1.214	1.222	1.230	1.239	1.247	1.255	1.263	1.271	1.279
25.20	640	1.164	1.171	1.180	1.188	1.196	1.204	1.212	1.220	1.228	1.236	1.244	1.252	1.260
25.59	650	1.145	1.153	1.161	1.169	1.177	1.185	1.193	1.201	1.208	1.216	1.224	1.232	1.240
25.98	660	1.127	1.135	1.143	1.151	1.159	1.167	1.174	1.182	1.189	1.198	1.206	1.213	1.221
26.38	670	1.111	1.119	1.126	1.134	1.142	1.149	1.157	1.165	1.172	1.180	1.188	1.195	1.203
26.77	680	1.095	1.103	1.110	1.118	1.125	1.133	1.141	1.148	1.156	1.163	1.171	1.179	1.186
27.16	690	1.078	1.086	1.093	1.101	1.108	1.116	1.123	1.131	1.138	1.146	1.153	1.161	1.168
27.56	700	1.064	1.071	1.079	1.086	1.093	1.101	1.108	1.115	1.123	1.130	1.137	1.145	1.152
27.95	710	1.048	1.055	1.063	1.070	1.077	1.084	1.092	1.098	1.106	1.113	1.121	1.128	1.125
28.35	720	1.033	1.041	1.048	1.055	1.062	1.069	1.076	1.083	1.091	1.098	1.105	1.112	1.119
28.54	725	1.027	1.034	1.041	1.048	1.055	1.062	1.069	1.076	1.083	1.091	1.098	1.105	1.112
28.74	730	1.019	1.027	1.034	1.041	1.048	1.055	1.062	1.069	1.076	1.083	1.090	1.097	1.105
28.94	735	1.013	1.019	1.027	1.034	1.041	1.048	1.055	1.062	1.069	1.076	1.083	1.090	1.097
29.13	740	1.006	1.013	1.020	1.027	1.034	1.041	1.048	1.055	1.062	1.069	1.075	1.083	1.089
29.33	745	0.999	1.006	1.013	1.020	1.027	1.034	1.040	1.048	1.054	1.061	1.068	1.075	1.082
29.53	750	0.992	0.999	1.006	1.013	1.020	1.027	1.033	1.040	1.047	1.054	1.061	1.068	1.075
29.72	755	0.986	0.993	1.000	1.007	1.014	1.021	1.027	1.034	1.041	1.048	1.055	1.062	1.068
29.92	760	0.980	0.986	0.993	1.000	1.007	1.014	1.020	1.027	1.034	1.041	1.047	1.054	1.061
30.12	765	0.972	0.979	0.986	0.993	0.999	1.006	1.013	1.020	1.026	1.033	1.040	1.047	1.054
30.31	770	0.967	0.973	0.980	0.987	0.994	1.000	1.007	1.014	1.020	1.027	1.034	1.041	1.047
30.51	775	0.961	0.968	0.974	0.981	0.987	0.994	1.001	1.007	1.014	1.021	1.027	1.034	1.041
30.71	780	0.954	0.961	0.967	0.974	0.980	0.987	0.994	1.000	1.007	1.014	1.020	1.027	1.033
30.90	785	0.948	0.955	0.961	0.968	0.974	0.981	0.988	0.994	1.001	1.007	1.014	1.021	1.027
31.10	790	0.942	0.949	0.955	0.962	0.968	0.975	0.981	0.988	0.994	1.001	1.008	1.014	1.021

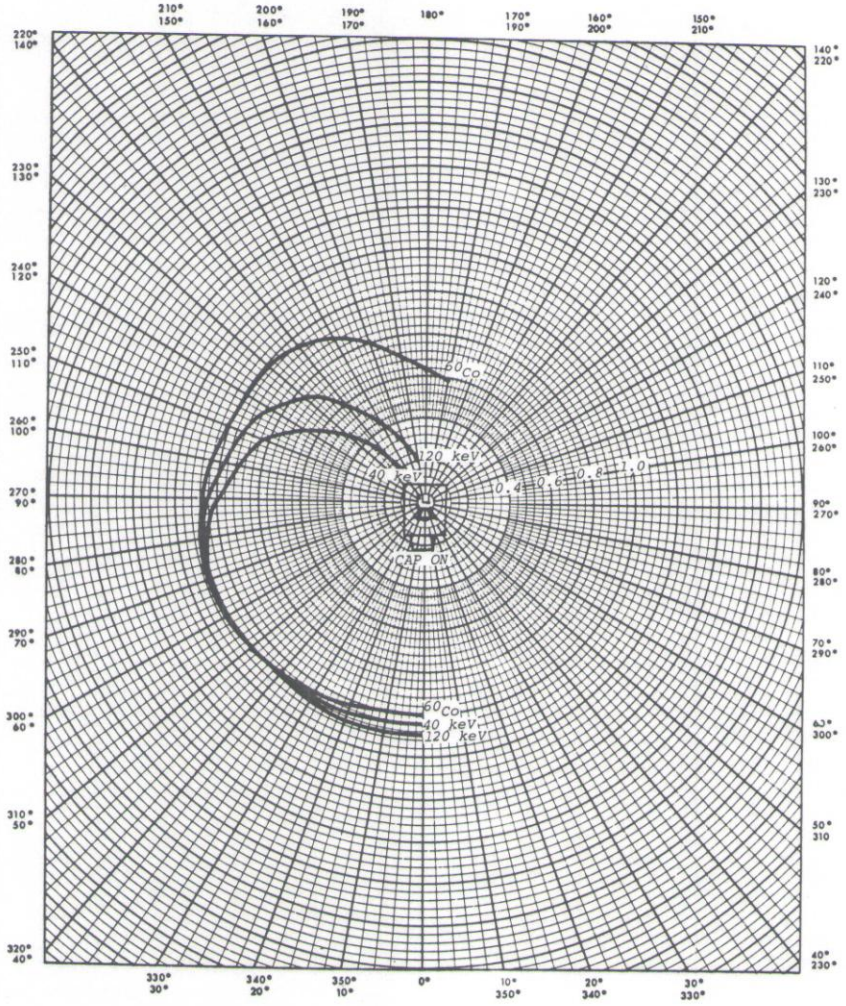

Figure 5. Relative Angular Response

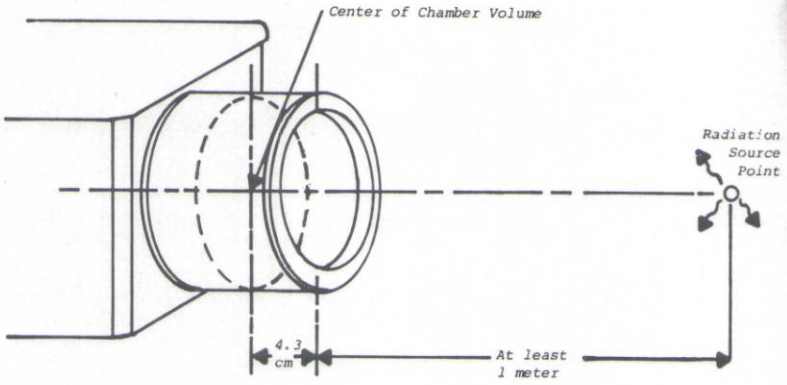

Figure 6. Source Distance

5 MAINTENANCE

5.1 Ion Chamber Replacement - If the ion chamber surface is damaged, or becomes contaminated, replace it using the procedure listed below. Perform the entire operation in one sitting. If you move away to something else, then return, a static charge can accumulate which will destroy the MOS FET electrometer. Figure 7 can be used as an aid in locating components.

1. Turn the Function Switch to integ. mR.
2. Turn the instrument off and wait two minutes.
3. Remove the three screws on the bottom edge of the ion chamber assembly.
4. Carefully pull the old ion chamber off.
5. Slip a new chamber into place.
6. Install the three screws on the bottom edge of the ion chamber assembly.
7. Recalibrate the instrument and return it to service.

5.2 Power Supply Adjustment - Potentiometer R19 adjusts the battery drain current. To adjust the potentiometer, connect a milliammeter in series with one of the battery leads and adjust R19 until the battery current is 24 mA. This adjustment is made with the Range Switch in the 300 position and the Function Switch in the mR/h position.

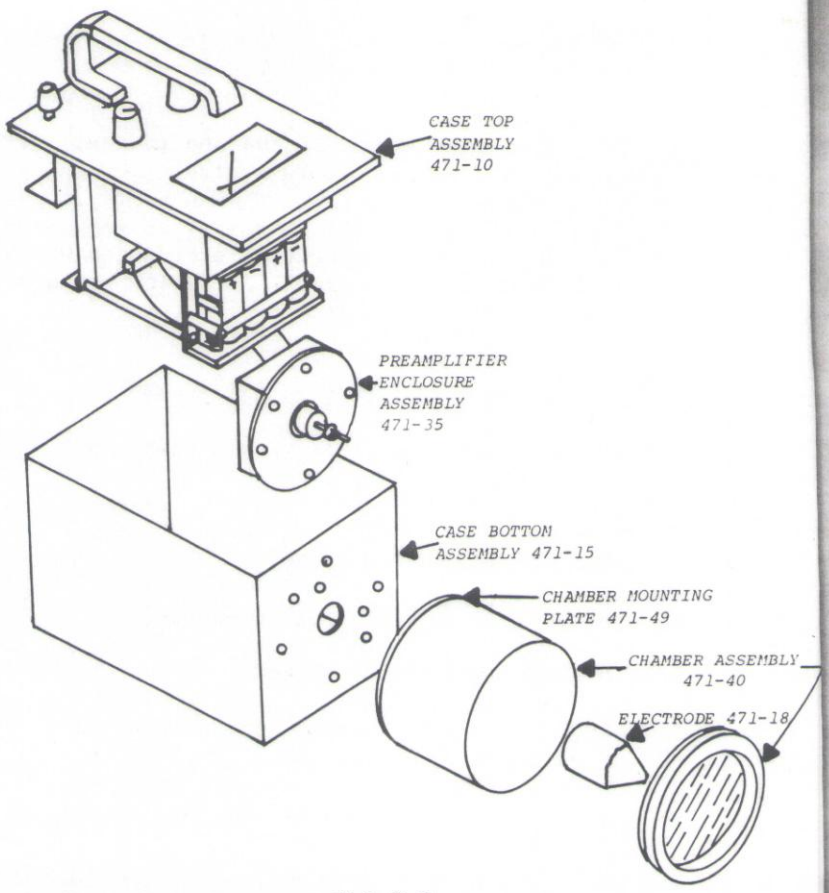

N O T E

Batteries must be installed observing the correct polarity; otherwise, a false (low) reading may occur.

Figure 7. Exploded View

5.3 Desiccant - High relative humidity can affect your ability to zero this instrument on its more sensitive ranges. An internally mounted desiccant cartridge has been provided to absorb moisture. To be effective, the desiccant must be dried out periodically. The nominal period is four months. (More humid environments require more frequent dryings.)

1. Remove the case bottom.

2. The desiccant cartridge is held by two nylon wraps screwed to the back of the collection battery bracket. Remove the two screws securing the nylon wrap.

3. Remove the cartridge and place it in an oven set at 120°C (250°F) for 24 hours or until the blue color of the desiccant is restored.

✓ DONE 9-2010

C A U T I O N

Do not heat the instrument to this temperature. To do so will cause damage to electronic components which is not covered by the warranty.

6 **TROUBLESHOOTING** - If the 471 does not pass the turn on sequence and/or the calibration test described in Topic 3.3, the following steps will verify operation of the batteries and the main circuit board. If these parts are operating correctly, but the 471 is still not working, contact the factory or a regional service center (listed at the back of this manual). Do not attempt to repair the preamplifier. Tampering with it could void the Victoreen warranty.

To troubleshoot the 471, follow the steps listed below. Figure 7 is provided to help you locate the major components of the instrument.

1. Turn the instrument off and wait one minute.

2. Remove the case bottom, then pull the preamplifier assembly away from the rest of the instrument.

3. Slide the meter and main circuit board assembly out, then place the instrument, with interconnecting cable still in place, on a nonconducting surface.

4. Turn the instrument on, being careful not to touch circuitry with a high voltage potential. Some of the circuitry is at -90 V. Wait two minutes, then place the 471 in the 3 R/h range.

BLANK

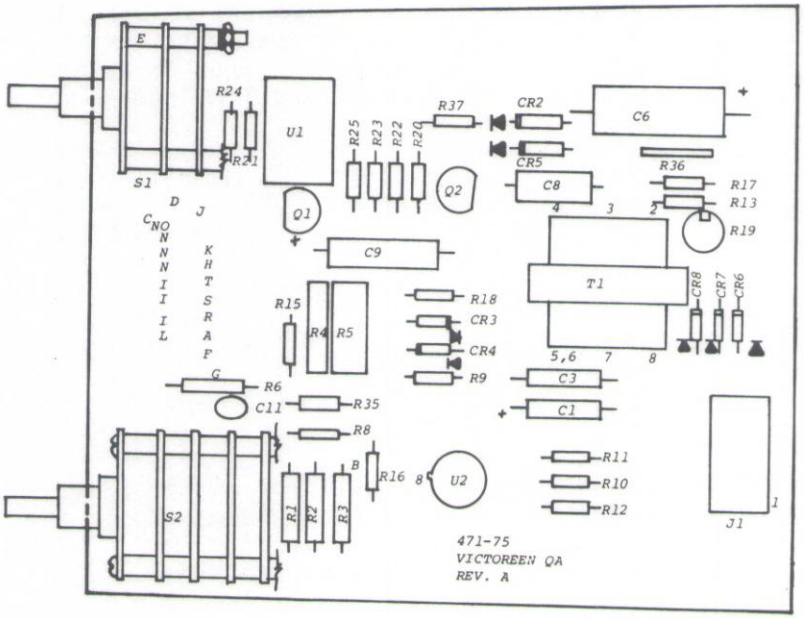

Figure 8. Circuit Board Assembly

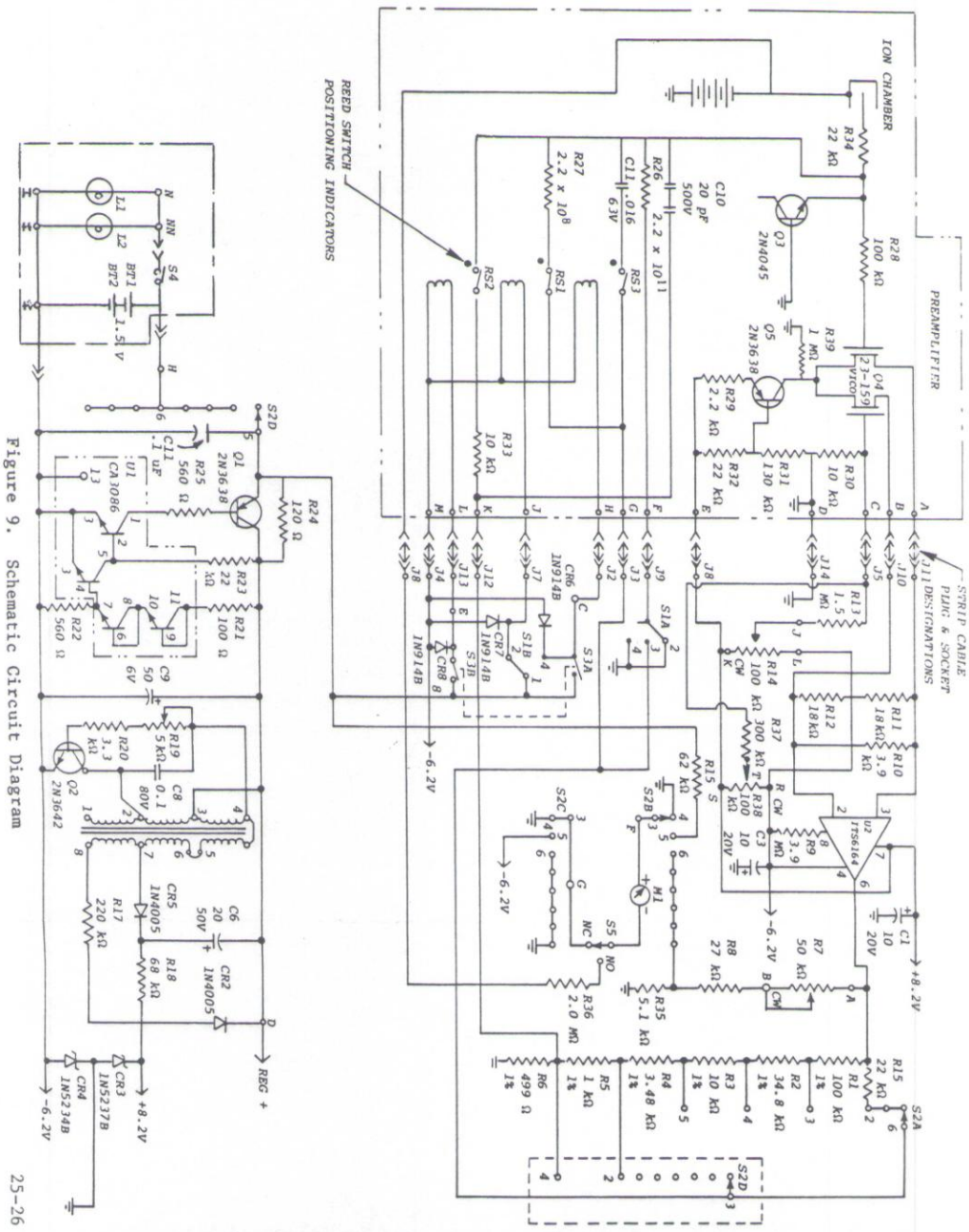

Figure 9. Schematic Circuit Diagram

25-26

BLANK

7 REPLACEABLE PARTS

REF	DESCRIPTION	PART NUMBER
	Case Top Assembly	471-10-3
R38	Potentiometer, 50 K, Calibrate	22-1026
R7	Potentiometer, 100 K, Coarse Zero	22-367
R14	Potentiometer, 100 K	22-368
S5	Switch, Chamber Bias Voltage Test	11-112
	Battery, AA, 22.5 V	16-31
	Battery, D-cell, 1.5 V	16-4
	Backing Plate Weldment Assembly	471-30
	Meter Assembly	471-38
	Main Printed Circuit Board Assembly	471-75
T1	Transformer	14-188
R10	Resistor, 3.9 K	185-1431
R8	Resistor, 27 K	185-1432
R22		
R25	Resistor, 560 ohm	185-1460
R11		
R12	Resistor, 18 K	185-1464
R21	Resistor, 100 ohm	185-1465
R20	Resistor, 3.3 K	185-2414
R35	Resistor, 5.1 K	185-2415
R18	Resistor, 6.8 K	185-2416
R24	Resistor, 120 ohm	185-2444
R23		
R16	Resistor, 22 K	185-2466
R37	Resistor, 300 K	303041
R17	Resistor, 220 K	185-3404
R9	Resistor, 3.9 M	185-3452
R36	Resistor, 2 M, 1/2 W, 1%	185-3538
R15	Resistor, 62 K	813-3547
R6	Resistor, 499 ohm, 1/4 W, 1%	185-3550
R1	Resistor, 100 K, 1/4 W, 1%	185-3553

7 REPLACEABLE PARTS (Cont'd)

REF	DESCRIPTION	PART NUMBER
R5	Resistor, 1 K, 1/4 W, 1%	185-3557
R3	Resistor, 10 K, 1/4 W, 1%	185-3559
R13	Resistor, 7.5 M	185-3600
R2	Resistor, 34.8 K, 1/4 W, 1%	185-3814
R4	Resistor, 3.48 K, 1/4 W, 1%	185-3815
C9	Capacitor, 50 uF, 6 V	21-2056
C11	Capacitor, 0.1 uF	21-2074
C1		
C3	Capacitor, 10 uF, 20 V	21-758
C8	Capacitor, 0.1 uF, 80 V	21-850
C6	Capacitor, 20 uF, 50 V	21-924
R19	Potentiometer, 5 K	22-289
Q1	Transistor, 2N3638	23-61
Q2	Transistor, 2N3642	23-62
	DIP Socket, 14 pin	33-139-14
S1	Function Switch	470-106
S2	Range Switch	470-107
CR3	Diode, 1N5237, 8.2 V	52-149
CR4	Diode, 1N5234B	52-181
CR6		
CR7		
CR8	Diode, IN914B	52-91
CR2		
CR5	Diode, 600 P.I.V. 1A	52-219
	Handle Cover	471-6
U1	IC, 3086	63-26
U2	IC, 6164	63-9
	Handle	471-79
	Case Top	471-9
	Cable Strap	61-3
	Knob	9-85
	Knob, Black, Zero Set	9-86

7 REPLACEABLE PARTS (Cont'd)

REF	DESCRIPTION	PART NUMBER
	Case Cover	470-137
	Cable and Connector Assembly	471-115
	Case Bottom, Processed	471-16
	Preamplifier Enclosure Assembly	471-35
	Chamber Assembly	471-40
	Chamber Window Frame	471-13
	Rubber Foot	70-106
	Silica Gel	MSM-1903

N O T E

Component values used in this instrument may not agree exactly with those indicated in the parts list or circuit diagram. For purposes of replacement either the value as installed, or that indicated in the manual, may be used. When ordering parts from the factory use the part number in the parts list.

WARRANTY

This instrument and its accessories, excluding those accessories listed below, is warranted by VICTOREEN, INC., against defects in materials and workmanship for a period of one year* from the date of original shipment. During the warranty period, VICTOREEN will repair or, at its option, replace, at no charge, an instrument containing such defect, provided that it is returned, transportation prepaid, to the authorized VICTOREEN repair facility. Instruments repaired in warranty will be returned transportation prepaid within the United States.

*Specific mechanical products may have a more limited warranty period as stated in the front of this manual.

In addition, the calibration of each instrument is warranted to be within its specified accuracy at the time of shipment. If an error in this initial calibration is discovered, the instrument will be recalibrated at no charge, provided it is returned as described above. This does not apply to any calibration deviation that may result from normal use.

THERE ARE NO WARRANTIES, EXPRESS OR IMPLIED, INCLUDING WITHOUT LIMITATION ANY IMPLIED WARRANTY OF MERCHANTABILITY OR FITNESS, WHICH EXTEND BEYOND THE DESCRIPTION ON THE FACE HEREOF. THIS EXPRESS WARRANTY EXCLUDES COVERAGE OF AND DOES NOT PROVIDE RELIEF FOR INCIDENTAL OR CONSEQUENTIAL DAMAGES OF ANY KIND OR NATURE, INCLUDING BUT NOT LIMITED TO LOSS OF USE, LOSS OF SALES OR INCONVENIENCE. THE EXCLUSIVE REMEDY OF THE PURCHASER IS LIMITED TO REPAIR, RECALIBRATION OR REPLACEMENT OF THE INSTRUMENT AT VICTOREEN'S OPTION.

This warranty does not apply if the product, as determined by VICTOREEN, is defective because of normal wear or accident or misuse, or as a result of service or modification by other than an authorized VICTOREEN repair facility. This warranty is void if the unit is subjected to temperatures above 55°C., or contaminated with radioactive material.

This warranty specifically excludes the following items which are covered by their original manufacturers' warranty: photomultiplier, geiger and proportional tubes, crystal and other solid state detectors, batteries and major ancillary items of instrument systems, such as, but not limited to, recorders, printers and display devices.

NON-WARRANTY SERVICE

If repairs or replacement not covered by this warranty are required, a repair estimate will be submitted for approval before proceeding with the repair or replacement.

IMPORTANT: In order to expedite your repair, please supply the following: 1) Complete detailed description of problem, 2) Purchase Date, 3) Name of Vendor, 4) Order Number. Also, indicate which, if any, accessory items (batteries, carrying case, check source, voltage converter, etc.) are included in the return.

INSTRUCTION MANUAL

FOR

MODEL 471 SURVEY METER

Part No. 471-51

471580
Published by
VICTOREEN, INC.
Printed in U.S.A.

USER CAUTION

This instrument is intended solely for the detection and measurement of ionizing radiation. It should be used only by persons who have been trained in the proper interpretation of its readings and the appropriate safety procedures to be followed in the presence of radiation.

All instructions and warnings contained in this manual or on the instrument must be read before use and must be strictly followed. Failure to follow these instructions and warnings may result in inaccurate readings and/or user hazard. Indicated battery and other operational tests must be performed prior to each use to assure that the instrument is functioning properly.

READ YOUR INSTRUCTION MANJAL

WARNING!

Failure to conduct periodic performance tests in accordance with ANSI N323-1978, paragraphs 4.6 and 5.4, and to keep records thereof in accordance with paragraph 4.5 of the same standard, could result in erroneous reading of potential danger. ANSI N323-1978 becomes, by this reference, a part of this operating procedure.

WARRANTY

This instrument with its accessories, excluding those accessories listed below, is warranted by VICTOREEN, INC. against defects in materials and workmanship for a period of one year from the date of original shipment. During the warranty period VICTOREEN will repair, or at its option replace, at no charge an instrument containing such defect, provided that it is returned, transportation prepaid, to the VICTOREEN repair facility listed below. Instruments repaired under warranty will be returned transportation prepaid.

In addition, the nuclear radiation calibration (when applicable) for each instrument is warranted to be within its specified accuracy at the time of shipment. If an error in this initial calibration is discovered, the instrument will be recalibrated at no charge, provided it is returned as described above. This does not apply to any calibration deviation that may result from normal use.

There are no warranties, express or implied, including without limitation any implied warranty of merchantibility or fitness, which extend beyond the description on the face hereof. This express warranty excludes coverage of and does not provide relief for incidental or consequential damages of any kind or nature, including, but not limited to loss of use, loss of sales or inconvenience. The exclusive remedy of the purchaser is limited to repair, recalibration, or replacement of the instrument at VICTOREEN's option.

This warranty does not apply if the product, as determined by VICTOREEN, has been damaged by accident or misuse, or as a result of service or modification by other than an authorized VICTOREEN repair facility. This warranty is void if the unit is subjected to temperatures above 55°C.

This warranty specifically excludes the following items which are covered by their original manufacturers' warranties: Photomultiplier tubes, Geiger and proportional tubes, crystal and other solid-state detectors, batteries, and major ancillary items of instrument systems, such as, but not limited to, recorders and pumps.

PROCEDURES AND WARNINGS

The equipment herein described is designed and manufactured in compliance with all applicable safety standards. Nevertheless, certain hazards are inherent in the use of electronic and radiometric equipment. Adequate warnings are included in this manual and on the product itself to cover hazards that may be encountered in normal use and servicing of this equipment. No other procedures are warranted by VICTOREEN. It shall be the owner's or user's responsibility to see to it that the procedures herein are meticulously followed, and especially that the warning and cautionary notes are heeded. Failure on the part of the user in any way to follow the prescribed procedures shall absolve VICTOREEN and its agents from any resulting liability.

INSPECTION AND MATERIAL RETURN INSTRUCTIONS

Instruments should be examined and tested as soon as received by the purchaser. Claims for damage, if any, should be filed at once with the carrier. Instruments returned to the plant for warranty service, repair, calibration, replacement or credit must be accompanied by VICTOREEN's Return Material Authorization, Form 9083D-12-74. Two copies of this form are located at the end of this manual.

Material valued at $200.00 or more and/or weighing more than twenty pounds should be shipped the best way prepaid and fully insured.

We suggest that any instrument weighing over twenty pounds be wrapped in heavy kraft paper and packed in a double corrugated carton or wooden box. Protect the instrument on all sides with at least three inches of excelsior or similar padding. Mark the case plainly with suitable caution warnings to insure careful handling.

TABLE OF CONTENTS

		PAGE
1	Purpose	1
1.1	General Theory	1
1.2	Specifications	2
2	Unpacking	5
2.1	Power Requirements	5
2.2	Precautions	5
3	Function	6
3.1	Range Switch	6
3.1.1	Function Switch	6
3.1.2	Zero Set	6
3.1.3	Zero Adjust	6
3.1.4	Calibration Potentiometer and 22½ V Battery Test Switch	6
3.2	Operating Procedure (Turn-on Sequence)	6
3.3	Operational Tests	6
4	Calibration	9
4.1	Energy Dependence	9
4.1.1	Temperature and Pressure	9
4.1.2	Angular Dependence	9
4.1.3	Source Distance	9
4.1.4	Calibration Procedure	9
4.2	Troubleshooting	14
4.2.1	Test Procedure	14
4.3	Ion Chamber Replacement	15
	List of Replacement Parts	19

LIST OF TABLES

TABLE I	Specifications	2
TABLE II	Air Density Correction	13

LIST OF ILLUSTRATIONS

Figure 1	Collection Efficiency Graph	4
Figure 2	Underside of Model 471 w/Mounting Screws Displayed	7
Figure 3	Gauge Panel of Model 471	7
Figure 4	View of Instrument Showing Battery Check Micro Switch, Coarse Zero, and Calibration Control	7
Figure 5	Operational Amplifier; Current-Amplifier Configuration	8
Figure 6	Energy Response Correction Curve	10
Figure 7	471, Angular Dependence	11
Figure 8	Source Distance	12
Figure 9	Exploded View	16
Figure 10	Circuit Board Assembly	17
Figure 11	Schematic Circuit Diagram	18

1 Purpose - Model 471 is unparelleled in health physics survey instrumentation. The latest solid-state IC technology has been utilized to miniaturize circuitry, reduce weight and increase reliability. Accuracy and convenience have also been carefully considered to assure the best possible indication of the true radiation exposure. The Model 471 is ideal in such exposure measurement applications as background studies, general health physics surveys radiochemical lab surveys, nuclear power plant surveys, X-ray and radiotherapy facility surveys, fuel processing plant surveys, research lab surveys and in certain NDT applications.

1.1 General Theory - When the ion chamber is exposed to radiation the internal air volume becomes ionized. A d.c. potential applied between the outer shell and center electrode separates the newly formed ion pairs before they can recombine and collects them. The ions, upon reaching the electrodes, are restored to neutral gas atoms through the process of taking on (or giving up) electrons. This causes a direct current flow in the external circuit. The ion chamber can be considered a constant current generator whose output current is directly proportional to the rate of internal air ionization or exposure rate. These currents are extremely small however, and special electrometer circuitry is required to measure them.

An operational,current-amplifier configuration is employed in this instrument (See Figure 5). The large amount of negative feedback causes the output voltage to be a function of input current and feedback element value, rather than amplifier gain or other variables. A MOS FET electrometer is used for the operational amplifier. The feedback element is either a high megohm resistor or a capacitor.

Precision film resistors, selected by the Range Switch, determine the feedback ratio and hence, the full scale sensitivity of the instrument. A variable resistor is employed to accurately calibrate the meter deflection to a known exposure rate radiation field.

1.2 Specifications - See specifications in Table I.

TABLE I: SPECIFICATIONS

Feature	Specification
Dimensions	11½ inches long (29cm), 5 1/8 inches wide (13cm), 7 5/8 inches high(19.4 cm)
Weight	4.9 pounds including batteries (2.2Kg)
Range	Twelve overlapping ranges; 0-1, 3,10, 30,100,300 mR/hr and R/hr (rate) Six overlapping ranges; 0-1,3,10,30, 100, 300, mR (integrate).
Radiation Detected	Alpha, beta, gamma and X-ray
Detector	Unsealed, air ionization chamber. The chamber consists of a bakelite wall, 200 mg/cm^2 and a mylar window 1.1 mg/cm^2. The volume of the chamber is 485cc. An equilibrium cap of 300 mg/cm^2 is provided for the chamber.
Display	Meter, 3-1/8 (7.9cm) scale, taut band movement.
Control:	
External	Function Switch (R/hr, mR/hr,mR Integrate) Range Switch (Off, battery check 300,100, 30, 10, 3, 1). Zero Adjust.
Internal	Calibration Adjustment. Collecting Voltage check switch. Coarse Zero Adjust.
Energy Response	± 10% 6 keV to 300 keV along chamber axis, cap off. ± 10% 25 keV to 2 MeV with equilibrium cap on, 2π solid angle.
Response Time	8 seconds on 1 mR/hr range. 3 seconds on 10 mR/hr range decreasing to less than 1 second on all other ranges to 90%. of final reading.
Switching Transients	Less than 8 seconds when moving Function or Set Zero controls. No transients on other controls.
Batteries	Two 1.5 volt "D" cells and four 22.5 volts #505 Batteries (EVEREADY), NEDA # 221.

TABLE I: SPECIFICATIONS (CONT'D)

Feature	Specification
Battery Life	"D" Cells-mR/hr range: 150 hours at 24 hrs/day, 210 hours at 8 hrs/day. R/hr range: 85 hours at 24 hrs/day, 120 hours at 8 hrs/day. 22.5 volt batteries - shelf life, approximately <1 year.
Zero Adjust	Can be properly adjusted in a radiation field.
Warm-up Time	Less than one minute.
Environmental Effects:	
Temp. Range	-20°F + 120°F (-29°C to + 49°C)
Humidity Range	0-95% non condensing. Pressure dependent due to detector being unsealed air ionization chamber.
Geotropism	Negligible, less than two minor divisions on meter scale.
Response to Other Radiation:	
Minimum Energy to Penetrate Chamber	Alpha 3.5 MeV Beta 70 keV ~same as epidermis SKIN
Zero Drift with Temperature	6% per 10°C on 3mR/hr and 3R/hr range; 2% per 10°C on 10 mR/hr and 10R/hr range: 0.6% per 10°C on 30 mR/hr range and 30R/hr range. Can be completely eliminated by rezeroing.
Collection Efficiency	See Figure 1.

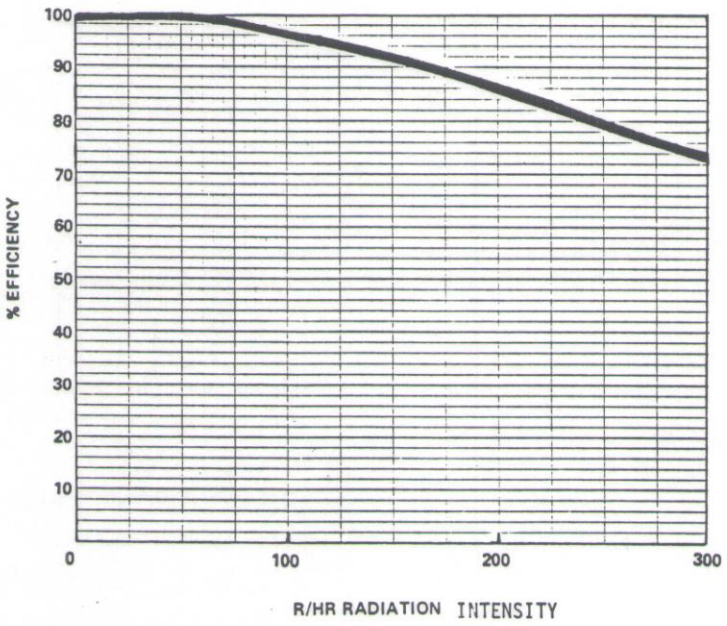

FIGURE 1. Collection Efficiency Graph

2 Unpacking - When unpacking the 471, check for any in-shipment damage.

2.1 Power Requirements - Two 1½ volt and four 22½ volt batteries are supplied with each instrument. Before installing the batteries be sure the Range Switch is in the "OFF" position. Open case.

To install the 22½ volt batteries, remove the four screws which hold the top of the instrument to the body and pull the top up-ward. The battery holder is mounted to the case top. Install the 22½ volt batteries observing the proper polarity. When mounting the front assembly to the body, dress the interconnecting cable in a manner which will not cause interference. Replace the mounting screws. See Figure 2.

The 22½ volt batteries provide chamber collection voltage and do not experience significant current drain. Battery life is equal to shelf life which should be in excess of one year.

The "BATT" position on the Range Switch will check the condition of the "D" cells only, which must read in the green area of the meter. Since the 22½ volt batteries will last for shelf life, they require only infrequent checking. Checking may be accomplished by inserting a tool into the "Test Chamber Voltage" opening and depressing the button which is located at the opposite end of the instrument (opposite the ion Chamber) to the extreme left. When the switch is actuated the meter will read about 95% of full scale. Note the reading for future reference to establish battery condition. The batteries should be replaced when they have dropped about 5% below their initial reading. This check must be performed with the Range Switch in the "OFF" position. See Figures 3 and 4.

The purpose of the collecting voltage is to supply the electrostatic field which sweeps the ions created in the chamber to the walls and center electrode, where they constitute the current which is measured by the electronics. This should be accomplished with as little recombination of these ions as possible. The voltage necessary for a certain ion collecting efficiency varies as the square root of the radiation intensity for a particular chamber geometry. Thus, since the chamber is 90% saturated at 1000 R/h at 90 volts, it requires only about 50 volts to produce 90% saturation at 300 R/h, full scale on the next range. Hence, the instrument is still quite useful, especially on the mR/h ranges, even if the collecting voltage has dropped to as much as half its original level. The reason for noting the reading of collecting voltage and replacing these batteries if the reading drops by about 5% is that such a decrease is a reasonable indication of the battery shelf life.

2.2 Precautions - If the ion chamber is broken or contaminated with radioactive material, the chamber must be replaced. See Paragraph 4.3 for this procedure.

3 Function - The 471 is an ionization chamber meter used to detect alpha, beta, gamma, and X-ray radiation. It measures total exposure from 0 to 300mR or exposure rate from 1 mR/hr fullscale for gamma and X-ray energies from 6.0 keV to 2MeV.

3.1 Range Switch - The Range Switch has eight positions. It can turn the instrument OFF, check the "D" cell battery voltage, or set the sensitivity 300, 100, 30, 10, 3, or 1.

3.1.1 Function Switch - The function switch determines whether the 471 measures R/hr, mR/hr, or integrates mR.

3.1.2 Zero Adjust - Since the instrument is susceptable to zero drift after initial "turn on" or when subjected to environmental extremes, zeroing is provided and may be accomplished in any radiation field.

Depress the Zero Set knob and adjust the Zero Adjust control on the instrument until the meter reads zero. Release the Zero Set knob and the instrument is ready for operation. The zeroing procedure should be followed before performing integration.

The coarse zero potentiometer may be set by first setting the front panel control to the middle of its adjustment range and then adjusting the coarse zero until the panel meter reads zero. Be certain to depress the set zero pushbutton during this procedure.

3.1.3 Calibration Potentiometer and 90% V Battery Test Switch - A calibration adjusting potentiometer and a collecting voltage battery test switch are located on the back panel directly under the rear end of the handle (the extreme right hand screw). The calibration potentiometer is factory adjusted and should be readjusted only with a calibrated radiation source.

3.2 Operating Procedure (Turn-on Sequence) - Turn the Range Switch from "OFF" to "BATT" and make sure the meter is in the "BATT" O.K." green region. Then turn the Range Switch to 300. Push the "ZERO SET" button and adjust zero as described in the previous paragraph. Turn the Function Switch to mR/hr.

After one minute, turn the Range Switch to 1mR/hr, and zero as above. The instrument should now read background radiation. The 471 is now ready to make measurements.

During the first five minutes of operation the 471's zero may drift due to dielectric absorption in the MOS FET. Rezero it every 3 or 4 minutes. After warm-up, the Mode and Range may be selected with the Function Switch.

3.3 Operation Tests - First the 471 must pass the "turn-on" procedure. To test, place a small radiation source nearby so the 471 reads about 1mR/hr. Turn the Range Switch to the 10mR/hr and to the 30mR/hr range, the meter reading should decrease on each range change to always indicate about 1mR/hr. If the 471 fails the "turn-on" or operational test, turn to Section 4.2

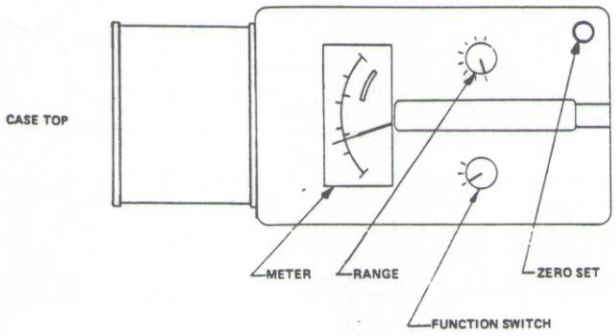

FIGURE 3. Gauge Panel of Model 471.

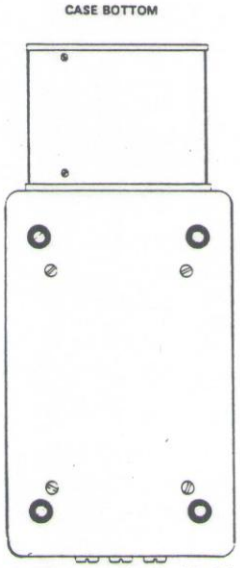

FIGURE 2. Underside of Model 471 w/Mounting Screws Displayed.

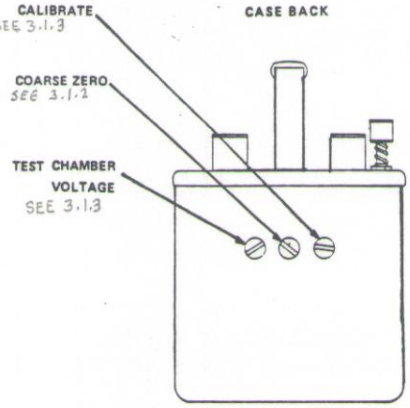

FIGURE 4. View of Instrument Showing Battery Check, Micro Switch, Coarse Zero, and Calibration Control.

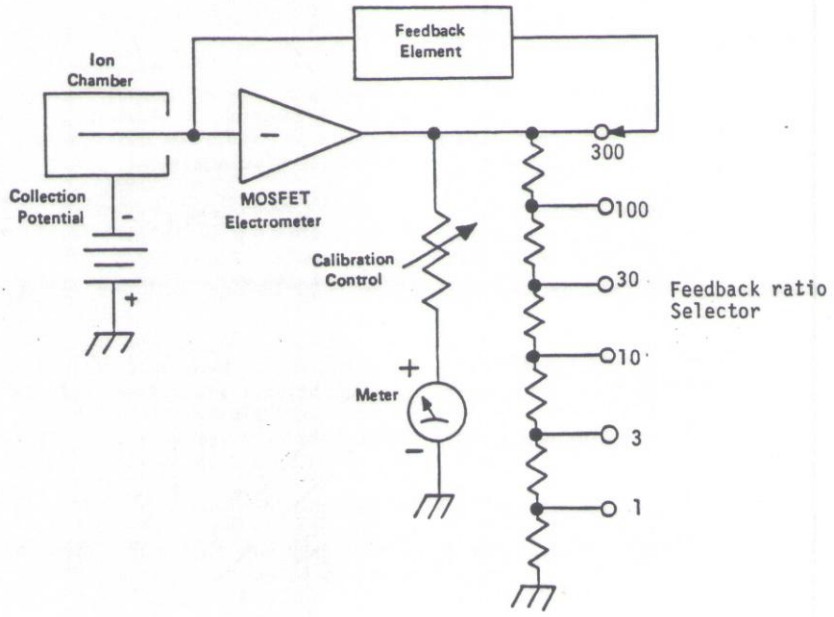

FIGURE 5. Operational Amplifier; Current-Amplifier Configuration

4 Calibration - The 471 is calibrated at the factory. When field recalibration is accomplished four correction factors must be remembered. They are Energy Dependence, Temperature and Pressure, Directional Dependence and Source Distance.

4.1 Energy Dependence - Any ion chamber has a certain energy dependence That is, holding the exposure rate constant, the chamber responds differently to different energy photons. The Model 471 has been calibrated at an effective energy of 662keV from ^{137}Cs. The response is fairly energy dependent in the low-energy region. For accurate usage at middle and high energy regions, the Energy Response Correction Curve must be used (See Figure 6). Divide Meter reading by value on curve.

4.1.1 Temperature and Pressure - Air, at standard temperature and pressure, is the ionized medium in the exposure rate definition. The density of the air determines directly the ionization rate with all other factors held constant. The density is, in turn, a function of barometric pressure and Kelvin temperature. Since the ion chamber is not sealed, a small correction must be made for temperature and barometric pressures different from those during calibration.

Standard temperature, $0^{o}C$, is rarely encountered in practice. The Model 471 is calibrated and corrected to $22^{o}C$ and 760 mmHg. For different temperatures and pressures, correction factors will be found on the Air Density Correction Table II. (See Table II).

4.1.2 Directional Dependence - The shape, wall material, center electrode design, and position of the ionization chamber of the Model 471 results in an instrument response relatively independent of the direction of the incident radiation. Figure 7 gives the relative angular response of the Model 471 with the equilibrium cap on at 1.3 MeV (^{60}Co), 120 keV and 40 keV effective.

4.1.3 Source Distance - If a point source or a collimated beam is used, the 471 chamber must be far enough from the source so the entire ion chamber is uniformly exposed. In practice this means any point source should be at least 1 meter from the ion chamber. The center of volume of the chamber is 4.3 cm fron the end. (See Figure 8).

4.1.4 Calibration Procedure -

1. Set the 471 to the 300 mR/hr range. Zero the 471.
2. Place the ion chamber in a 100mR/hr field and adjust the pot for the correct reading. Use the equilibrium cap if the effective energy of the source is over 100keV. Be sure to correct for temperature, pressure and energy response.

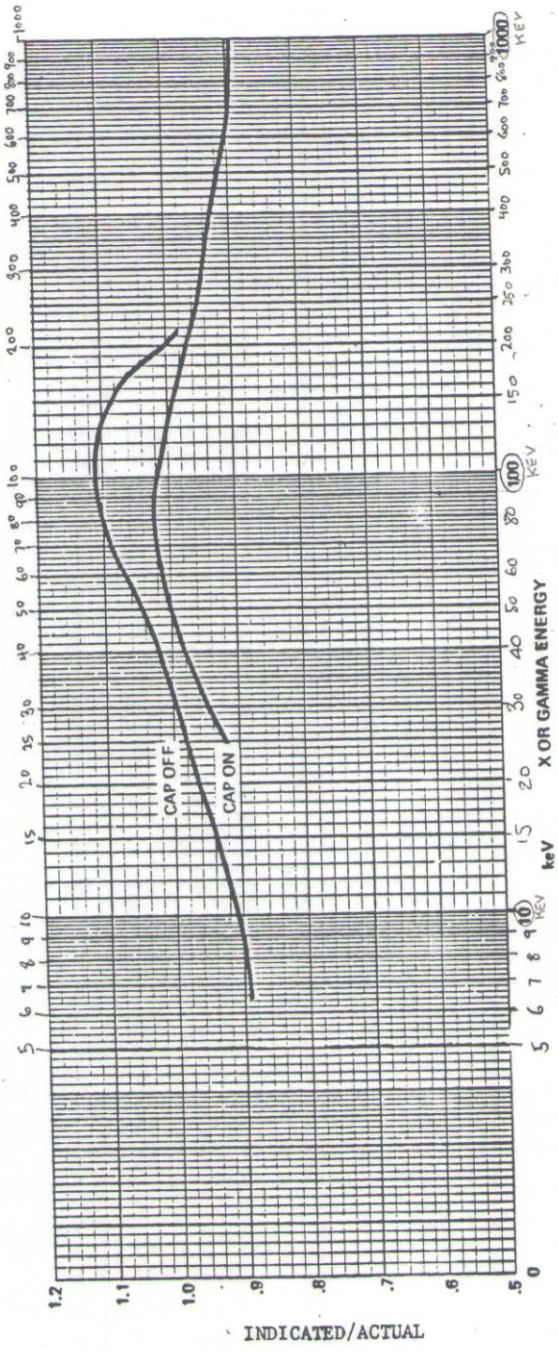

FIGURE 6. ENERGY RESPONSE CURVE

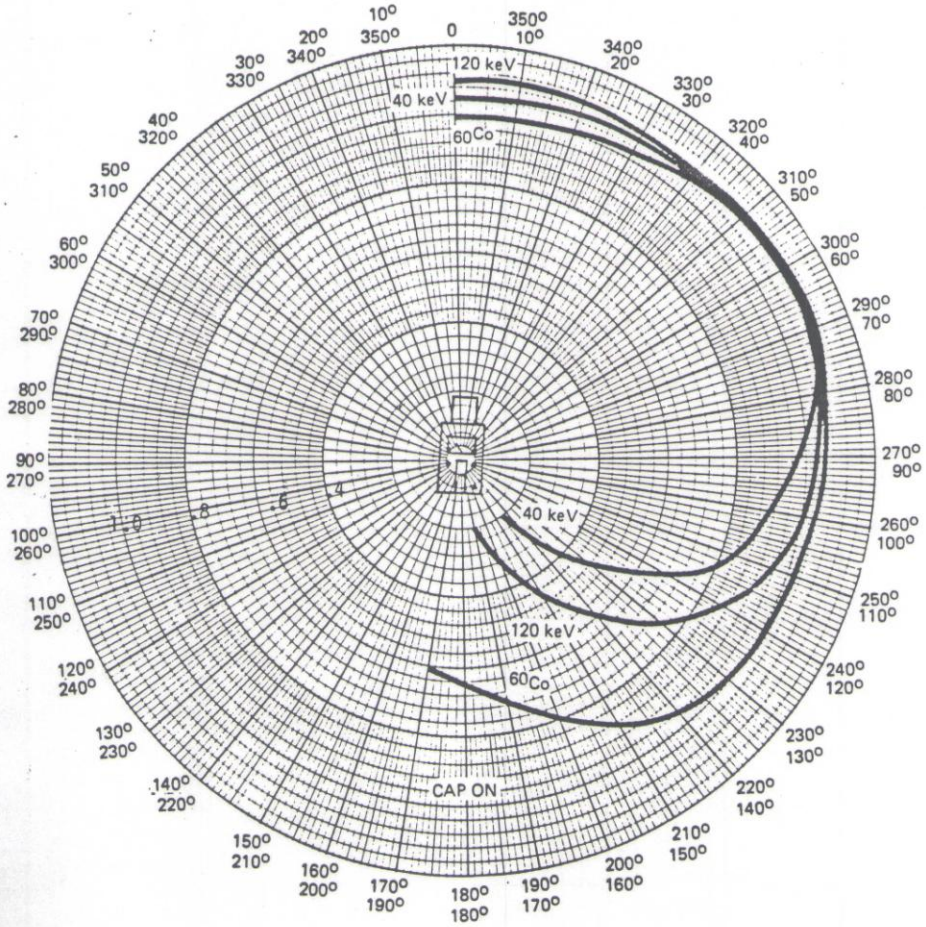

FIGURE 7. Relative Angular Response

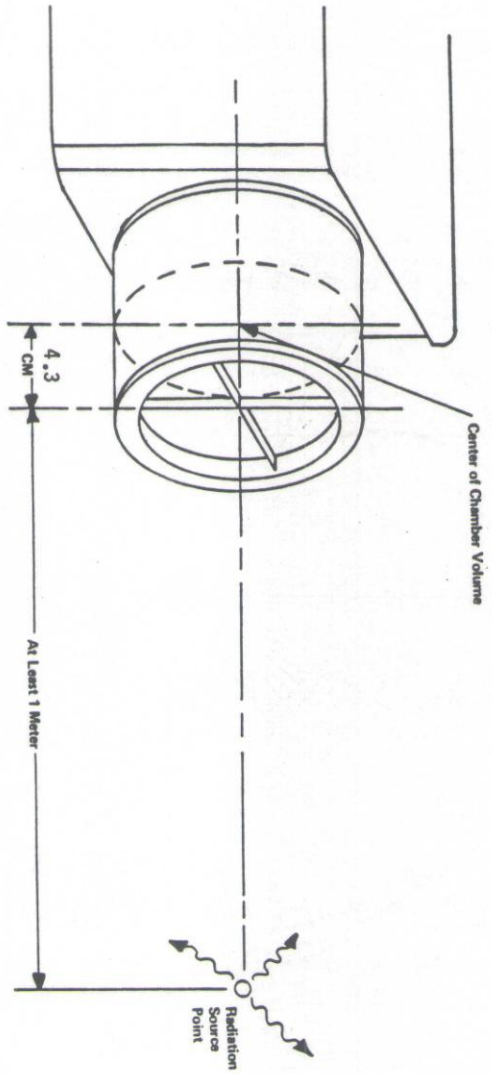

FIGURE 8. Source Distance

This instrument is calibrated in International Roentgens corrected to 0° Centigrade when used at 22° Centigrade and 760 mm. mercury (Hg) barometric pressure. For temperatures other than 22° Centigrade and pressures other than 760 mm. Hg., multiply the scale reading by the factor obtained from the following table.

Inches	Mm.	P. 60.8 C. 16	64.4 18	68.0 20	71.6 22	75.2 24	78.8 26	82.4 28	86.0 30	89.6 32	93.2 34	96.8 36	100.4 38	104.0 40
19.68	500	1.489	1.499	1.509	1.520	1.530	1.541	1.551	1.561	1.571	1.582	1.592	1.603	1.613
20.08	510	1.460	1.469	1.479	1.490	1.499	1.510	1.520	1.530	1.540	1.551	1.561	1.571	1.581
20.47	520	1.431	1.441	1.451	1.461	1.471	1.481	1.491	1.500	1.510	1.520	1.530	1.540	1.550
20.87	530	1.405	1.414	1.424	1.436	1.444	1.453	1.463	1.473	1.483	1.492	1.502	1.512	1.521
21.26	540	1.378	1.388	1.397	1.407	1.416	1.426	1.435	1.445	1.454	1.464	1.474	1.483	1.493
21.65	550	1.354	1.363	1.373	1.382	1.391	1.401	1.410	1.419	1.429	1.438	1.448	1.457	1.466
22.05	560	1.329	1.338	1.348	1.357	1.366	1.375	1.384	1.394	1.403	1.412	1.421	1.431	1.439
22.44	570	1.306	1.315	1.324	1.333	1.342	1.351	1.360	1.369	1.378	1.387	1.396	1.405	1.414
22.83	580	1.283	1.292	1.301	1.310	1.319	1.328	1.337	1.345	1.354	1.363	1.373	1.381	1.389
23.23	590	1.262	1.270	1.279	1.288	1.297	1.305	1.314	1.323	1.331	1.340	1.349	1.358	1.366
23.62	600	1.241	1.249	1.258	1.267	1.275	1.284	1.293	1.301	1.309	1.318	1.327	1.336	1.344
24.02	610	1.220	1.229	1.237	1.246	1.254	1.263	1.271	1.279	1.288	1.297	1.305	1.314	1.322
24.41	620	1.200	1.208	1.217	1.225	1.233	1.242	1.249	1.258	1.266	1.275	1.283	1.292	1.299
24.80	630	1.181	1.189	1.198	1.206	1.214	1.222	1.230	1.239	1.247	1.255	1.263	1.271	1.279
25.20	640	1.164	1.171	1.180	1.188	1.196	1.204	1.213	1.220	1.228	1.236	1.244	1.252	1.260
25.59	650	1.145	1.153	1.161	1.169	1.177	1.185	1.193	1.201	1.208	1.216	1.224	1.232	1.240
25.98	660	1.127	1.135	1.143	1.151	1.159	1.167	1.174	1.182	1.189	1.198	1.206	1.213	1.221
26.38	670	1.111	1.119	1.126	1.134	1.142	1.149	1.157	1.165	1.172	1.180	1.188	1.195	1.203
26.77	680	1.095	1.103	1.110	1.118	1.125	1.133	1.141	1.148	1.156	1.163	1.171	1.179	1.186
27.16	690	1.078	1.086	1.093	1.101	1.108	1.116	1.123	1.131	1.138	1.146	1.153	1.161	1.168
27.56	700	1.064	1.071	1.079	1.086	1.093	1.101	1.108	1.115	1.123	1.130	1.137	1.145	1.152
27.95	710	1.048	1.055	1.063	1.070	1.077	1.084	1.092	1.098	1.106	1.113	1.121	1.128	1.135
28.35	720	1.033	1.041	1.048	1.055	1.062	1.069	1.076	1.083	1.091	1.098	1.105	1.113	1.119
28.54	725	1.027	1.034	1.041	1.048	1.055	1.062	1.069	1.076	1.083	1.091	1.098	1.105	1.112
28.74	730	1.019	1.027	1.034	1.041	1.048	1.055	1.062	1.069	1.076	1.083	1.090	1.097	1.105
28.94	735	1.013	1.019	1.027	1.034	1.041	1.048	1.055	1.062	1.069	1.076	1.083	1.090	1.097
29.13	740	1.006	1.013	1.020	1.027	1.034	1.041	1.048	1.055	1.062	1.069	1.075	1.083	1.089
29.33	745	.999	1.006	1.013	1.020	1.027	1.034	1.040	1.048	1.054	1.061	1.068	1.075	1.082
29.53	750	.992	.999	1.006	1.013	1.020	1.027	1.033	1.040	1.047	1.054	1.061	1.068	1.075
29.72	755	.986	.993	1.000	1.007	1.014	1.021	1.027	1.034	1.041	1.048	1.055	1.062	1.068
29.92	760	.980	.986	.993	1.000	1.007	1.014	1.020	1.027	1.034	1.041	1.047	1.054	1.061
30.12	765	.973	.979	.986	.993	.999	1.006	1.013	1.020	1.026	1.033	1.040	1.047	1.054
30.31	770	.967	.973	.980	.987	.994	1.000	1.007	1.014	1.020	1.027	1.034	1.041	1.047
30.51	775	.961	.968	.974	.981	.987	.994	1.001	1.007	1.014	1.021	1.027	1.034	1.041
30.71	780	.954	.961	.967	.974	.980	.987	.994	1.000	1.007	1.014	1.020	1.027	1.033
30.90	785	.948	.955	.961	.968	.974	.981	.988	.994	1.001	1.007	1.014	1.021	1.027
31.10	790	.942	.949	.955	.962	.968	.975	.981	.988	.994	1.001	1.008	1.014	1.021

TABLE II. Air Density Correction Table

4.2 Troubleshooting (See Exploded View, Figure 9)

4.2.1 Test Procedure - If the 471 does not pass its "turn-on" procedure and "operational tests", the the following troubleshooting steps will check the batteries and main circuit board. If these parts test all right, but the 471 still does not work, contact the factory. DO NOT ATTEMPT TO REPAIR THE PREAMPLIFIER. TAMPERING WITH IT COULD VOID THE VICTOREEN WARRANTY.

To test the 471 follow these steps exactly.

1. Turn the Model 471 "OFF" and wait one minute.
2. Remove the 4 screws from the bottom of the case and pull the preamplifier and bulkhead assembly from the rest of the instrument.
3. Slide out the meter and circuit board assembly and place the 2 portions of the instrument (handle, meter, circuit board, and preamplifier; and ion chamber), still connected together, on a non-conducting surface. DO NOT OPEN OR TRY TO TEST THE PREAMPLIFIER THE CIRCUITRY IS EASILY DESTROYED.
4. Turn "ON" the Model 471 carefully. Some of the circuitry is at -90 volts. Wait 2 minutes. Place in the 0-3R/hr range.
5. Measure the three supply voltages; +8.2 ± 5%, -6.2± 5% and regulated battery voltage. The +8.2 volts and -6.2 volts are most conveniently measured between ground (the transformer T1 case) and the front and rear end terminals, respectively, of the Zero Adjust potentiometer R19. The regulated supply voltage is the voltage across C9 and should measure between 2.2 and 2.3 volts.
6. If these voltages are correct, check the voltages across R11 and R12. These should both be about 1.5 volts and equal. Refer to Figure 10, Circuit Board Assembly and Figure 11, Schematic Circuit Diagram, for further continuity and voltage checks. If the difficulty seems to lie in the preamplifier, return the instrument to a VICTOREEN Service Representative.
7. After testing, turn the 471 "OFF" and wait 2 minutes. Reassemble the instrument in the reverse order of disassembly.

4.3 Ion Chamber Replacement - (See Exploded View, Figure 9).

If the ion chamber surface is broken or deformed, replace it using the following procedures. Do this entire operation in one sitting. If you move away to something else then return, you can accumulate a static charge that will destroy the MOS FET.

1. Turn the Function Switch to "INTEGRATE."
2. Turn the 471 "OFF" and wait 2 minutes.
3. Remove the 3 screws.
4. Carefully pull the old ion chamber off.
5. Slip a new chamber into place.
6. Install the 3 screws.
7. Recalibrate the instrument.

4.4 Power Supply Adjustment - Potentiometer R19 adjusts the battery drain current which is accomplished by connecting a milliameter in series with one of the battery leads and adjusting R19 until the battery current is 24mA This adjustment is made with the Range Switch in the "300" position and the Mode Switch in the "mR/hr" position.

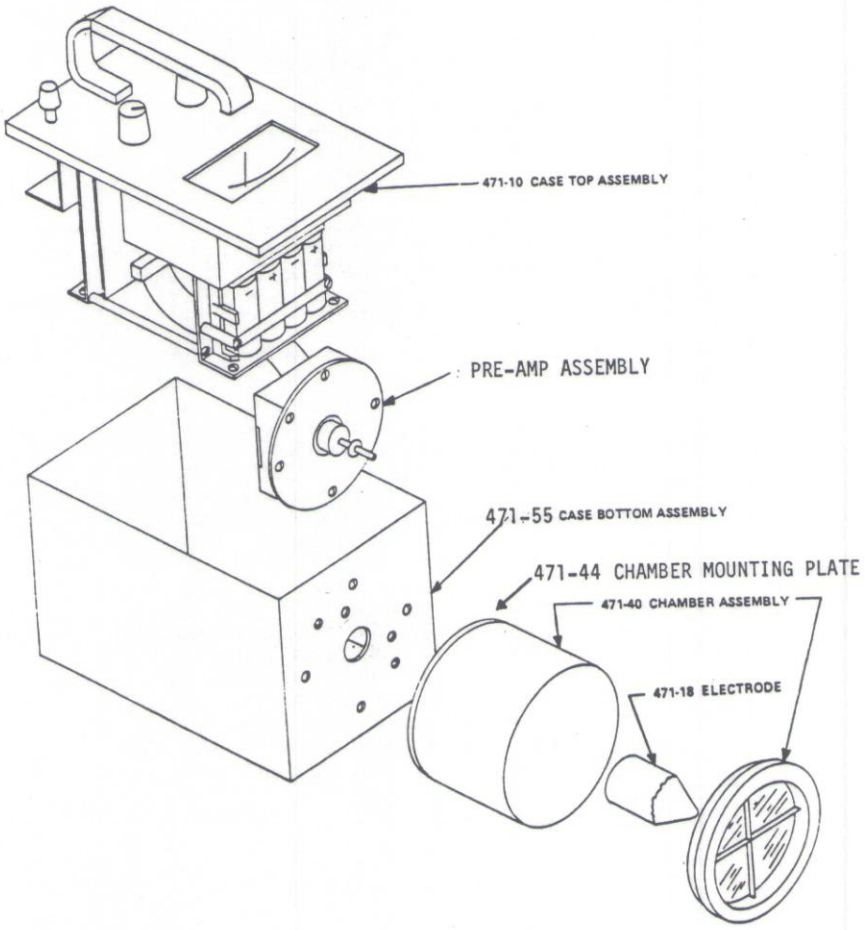

FIGURE 9. Exploded View

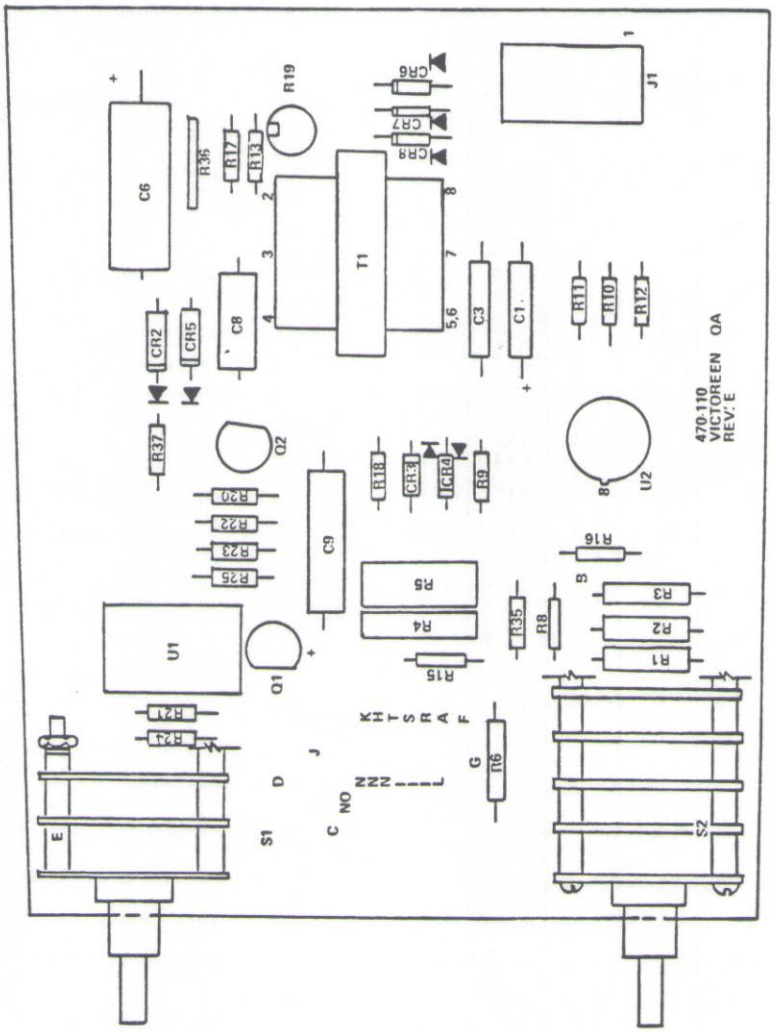

FIGURE 10. Circuit Board Assembly

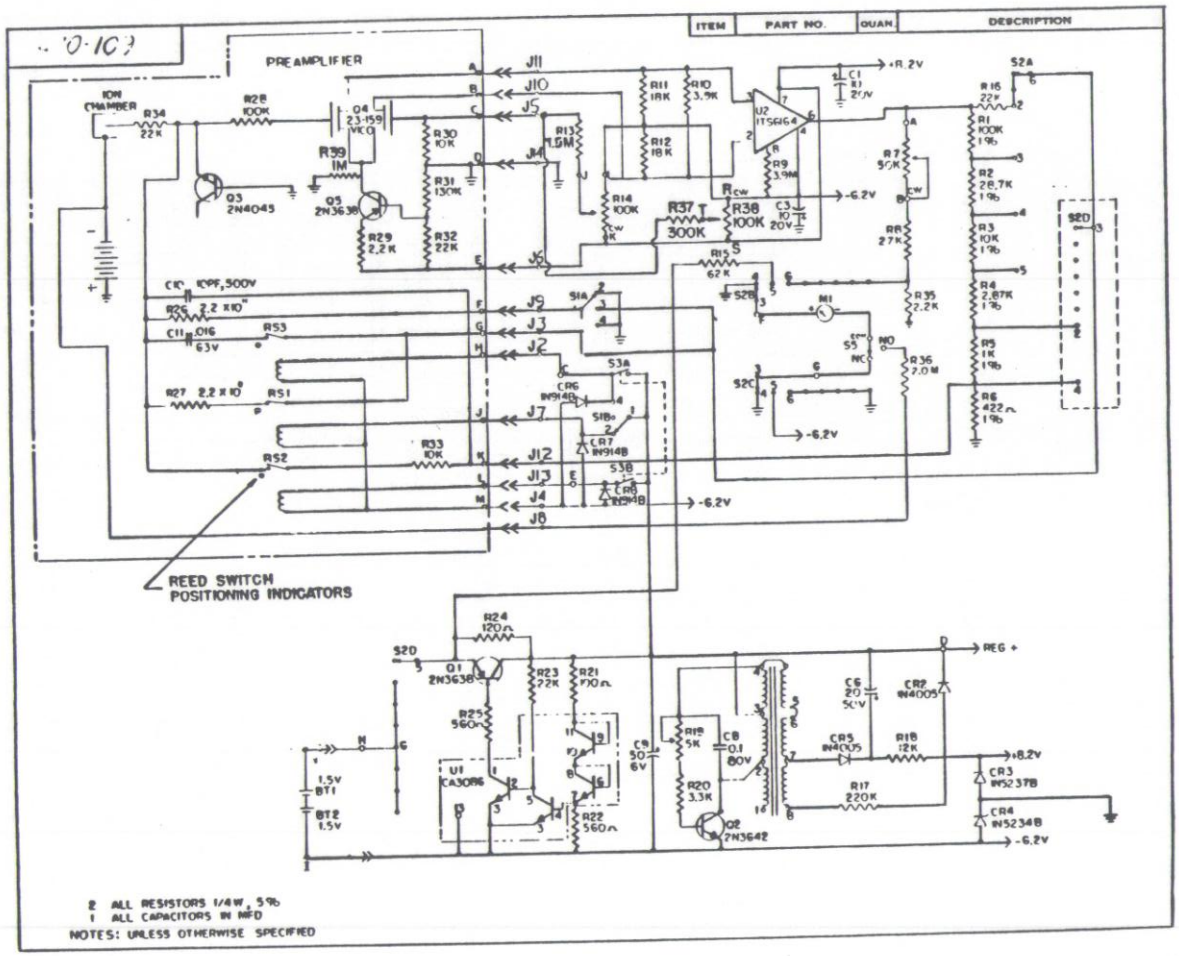

FIGURE 11. Schematic Circuit Diagram

LIST OF REPLACEABLE PARTS

Electrical

Symbol Desig.	Part No.	Description	Qty.
C1, C3	21-758	Capacitor 10 µF 20 V	2
C6	21-942	Capacitor 20 µF 50 V	1
C8	21-2055	Capacitor .0082 µF 100 V	1
C9	21-2056	Capacitor 50 µF 6 V	1
CR2, CR5	52-91	Diode IN4005	2
CR3	52-149	Diode, Zener IN5237B	1
CR4	52-181	Diode, Zener IN5234B	1
CR6,CR7,CR8	52-219	Diode, Zener IN914B	3
Q1	23-61	Transistor 2N3638	1
Q2	23-62	Transistor 2N3642	1
R1	185-3553	Resistor 100 kΩ ¼W 1%	1
R2	185-3674	Resistor 28.7 kΩ ¼W 1%	1
R3	185-3559	Resistor 10 kΩ ¼W 1%	1
R4	185-3675	Resistor 28.7 kΩ ¼W 1%	1
R5	185-3557	Resistor 1 kΩ ¼W 1%	1
R6	185-2452	Resistor 422 Ω ¼W 1%	1
R7	22-1026	Potentiometer 50 kΩ	1
R8	185-1432	Resistor 27 kΩ ¼W 5%	1
R9	185-3452	Resistor 3.9 MΩ ¼W 5%	1
R10	185-1431	Resistor 3.9 kΩ ¼W 5%	1
R11,R12	185-1464	Resistor 18 kΩ ¼W 5%	2
R13	185-3482	Resistor 470 kΩ ¼W 5%	1
R14	22-315	Potentiometer	1
R15	185-3547	Resistor 62 kΩ ¼W 5%	1
R17	185-3404	Resistor 220 kΩ ¼W 5%	1
R18	185-1458	Resistor 6.8 kΩ ¼W 5%	1
R19	22-289	Potentiometer 5 kΩ	1
R20	185-2414	Resistor 3.3 kΩ ¼W 5%	1
R21	185-1465	Resistor 100 Ω ¼W 5%	1
R22, R25	185-1460	Resistor 560 Ω ¼W 5%	2

LIST OF REPLACEMENT PARTS (CONT'D)

Electrical

Symbol Desig.	Part No.	Description	Qty.
R23, R16	185-2466	Resistor 22 kΩ, ¼W 5%	2
R24	185-2444	Resistor 230 Ω, ¼W 5%	1
R25	185-1454	Resistor 2.2 kΩ, ¼W 5%	1
R36	185-1442	Resistor 2 MΩ, ¼W 5%	1
S1	470-106	Switch, Function	1
S2	470-107	Switch, Range	1
S3	11-111	Switch, Auto Zero	1
S5	11-112	Switch	1
T1	14-6	Transformer	2
U1	63-26	Integrated Circuit CA3086	1
U2	63-9	Integrated Circuit ITS6164	1
	471-10-3	Case Top Assembly	1
	471-15	Case Bottom Assembly	1
	471-10-3	Case Top Assembly	1
	471-30	Backing Plate Weldment Assembly	1
	471-9	Case Top Processed	1
	471-6	Handle Cover	1
	496-6	Handle	1
	9-76	Knob	2
	9-76-1	Knob Cap	3
	471-31	Meter Box	1
	471-15	Case Bottom Assembly	1
	471-40	Chamber Assembly	1
	470-137	Case Cover	1
	70-106	Rubber Foot	4
	471-14	Chamber Cover	1
	471-13	Chamber Window Frame	1
	471-12	Chamber Window Guard	2
	471-11	Chamber Window Inner	1
	471-35	Pre-Amp Enclosure Assembly	1
	470-149	Case Assembly	1
	471-21	Outer Cover Processed	1
	471-23	Holder Ring, Outer	1
	471-24	Holder Ring, Inner	1
	471-19	Magnesium Window	1
	470-149	Case Assembly	1
	470-138	Case Base Processed	1
	470-135	Case	1
	470-138	Case Base Processed	1
	CP70-9	Glass Tube	1
	471-16	Case Bottom Processed	1
	471-17	Case Bottom	1
	470-8	Housing Front Cover	1
	471-38	Meter	1

N O T E

Component values used in this instrument may not agree exactly with those indicated in the parts list or circuit diagram. For purposes of replacement either the value as installed or that indicated in the manual may be used. When ordering parts from the factory use the part number in the parts list.

THE PROPER CARE AND STORAGE OF ION CHAMBER INSTRUMENTS SHOULD FOLLOW THE GUIDELINES LISTED BELOW:

In areas where the humidity is exceptionally high, Ion Chamber instruments may become saturated with moisture causing them to fail. To avoid this occurance, store instruments in a typical dry box (See Illustration). Smaller instruments can be stored in polyethylene bags with dessiccant packet or a dry box with either a 100-watt light bulb or renewable dessiccant packet.

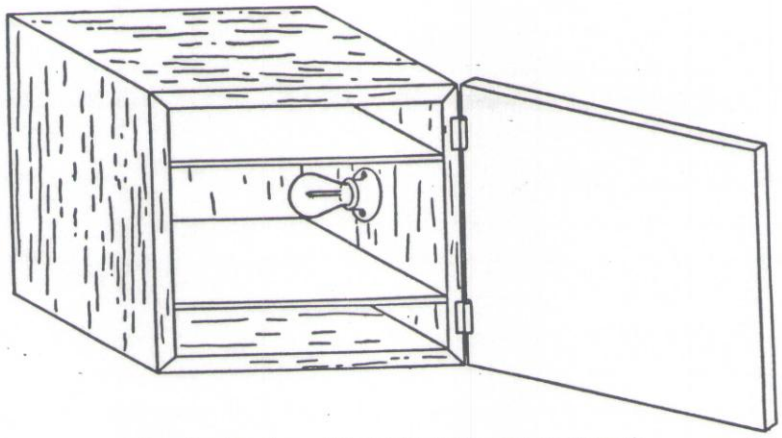

Sample dry box with light bulb and shelves.*
(wood materials used)

*NOTE: This particular dry box is an artist's presentation and not necessarily in existence. The customer may use a different type of dry box so long as it is applicable to their instruments and needs.

VICTOREEN MATERIAL RETURN FORM

(To be used when return of material has been authorized by VICTOREEN)

ONE COPY OF THIS FORM
MUST ACCOMPANY ALL MATERIAL RETURNED FOR ANY REASON

Forward second copy directly to person authorizing return.

Name of Sender _____

Phone Number _____

Company Affiliation _____

Street _____

City _____ State _____ Zip _____

Customer Order Number _____

Victoreen Register Number or Invoice Number _____

Date Purchased _____

Model or Type Number _____ Serial Number _____

Warranty Repair Yes ☐ No ☐

Reason for Return _____

Return Authorized by _____

Victoreen Sales Department

VICTOREEN, INC.
A Sheller-Globe Corporation Subsidiary
10101 WOODLAND AVE • CLEVELAND, OHIO 44104
Phone: (216) 795-8200 • TWX: (810) 421-8287

9083E-7-79

VICTOREEN

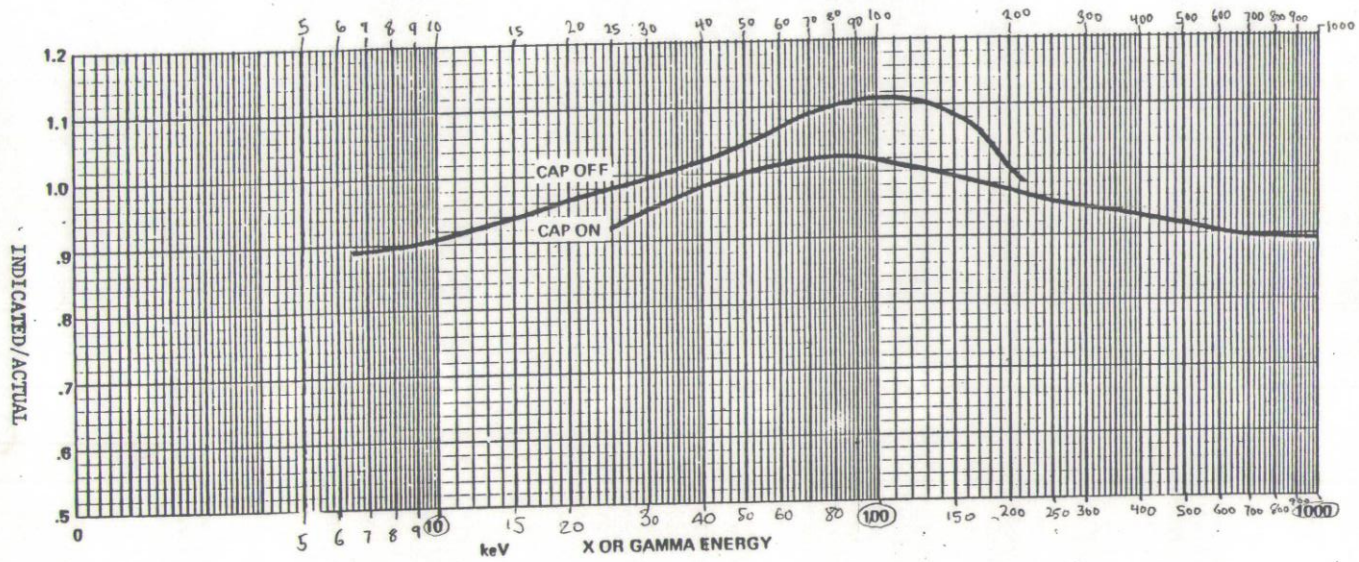

FIGURE 6. ENERGY RESPONSE CURVE

6 kev to 2 mev

Vic 471 energy Response